SIKKERHEDSSTYRELSEN TYPEGODKENDELSESATTEST NR. 591-35-00004	Nr.: 591-35-00004 Dato: 2012-08-06 Udgave 1
Gyldig til 2014-08-06	Systembetegnelse: TS 22.48-001

MÅLEANLÆG

Nedennævnte måleanlæg er herefter individuelt godkendt
med systembetegnelsen TS 22.48-001

Producent tankvogn	Kurt Willig GmbH & Co. KG, Borsigstr. 23, 94315 Straubing, Germany
Producent måleanlæg	DEZIDATA GmbH, Industriestr. 10, 94469 Deggendorf, Germany
Ansøger	DEZIDATA GmbH, Industriestr. 10, 94469 Deggendorf, Germany
Art	Tankvogn med niveaumåling (Dip Stick)
Type	DIPCHECK2/DCSTF
Anvendelse	Udmåling af homogene væsker i viskocitetsområde ≤ 20 mPa·s ved 20℃
Opstillingssted	DANTRA A/S, Vejlevej 7, Hjøllund, 7362 Hampen, Danmark

BEMÆRK	Måleinstrumenter, som ikke er helt identiske med det i attesten fastlagte, kan kun verifcieres under forudsætning af særskilt godkendelse ved tillæg til denne attest.

TYPEGODKENDELSESATTEST	Nr.: 591-35-00004
	Dato: 2012-08-06

1. GODKENDELSESGRUNDLAG

Måleanlæggene er godkendt i henhold til:

PTB godkendelse 4.412 / 06.08 med tilføjelser og/eller undtagelser beskrevet i denne godkendelse.

2. INDIVIDUELT GODKENDTE MÅLEANLÆG

Tankmåleanlæg nr. 117A1035

Tankmåleanlæg nr. 117A1036

Tankmåleanlæg nr. 117A1037

Tankmåleanlæg nr. 117A1038

Tankmåleanlæg nr. 117A1039

3. LEGALE MÅLEDATA, GENERELT

Måleområde	**Maximalt 3000 mm**
Mindste verificerede udmåling	**Mindst 150 mm af max måleområde**
Væsketyper	**Homogene væsker i viskocitetsområde ≤ 20 m 20℃**
Verifikationstolerance	**± 0,5 %**
Omgivelsestemperatur	**25 ℃ til + 55 ℃**
Øvrige specifikke legale måledat	**Som beskrevet i PTB godkendelse 4.412/06.08 og på måleanlæggets Name plate og Data sheet (Messanlagenbrief)**

BEMÆRK	Måleinstrumenter, som ikke er helt identiske med det i attesten fastlagte, kan kun verifcieres under forudsætning af særskilt godkendelse ved tillæg til denne attest.

4. DATA SHEET

For hvert tankmåleanlæg udstedes et Datasheet (Messanlagenbrief e.lign.) som skal forefindes på køretøjet. Datasheet skal som minimum indeholde følgende information:

1. Antal tankvognsrum
2. Tankvognsrummets nr. og volumen
3. Inklinator sensor - type/serie nr.
4. Betjeningsenhed/Visning - type/serie nr.
5. Kalkulator enhed - type/serie nr.
6. Kalkulator enhed - SW-version
7. Tankrums mindste verificerede mængde
8. Tankrums restvolumen
9. Tankrums pejlerør – type/serie nr.
10. Tankrums restvolumen sensor – type/serie nr.
11. Logblad reparation/plombebrud /parameter – og SW indgreb
12. Plomberingsoversigt
13. Logblad Verifikation
14. Funktions- og rørdiagram
15. Print af systemets gældende Legal metrologiske parametre
16. Print af systemets gældende pejletabel for hver enkelt tankru

5. VERIFIKATIONSBESTEMMELSER

Preleminær 1.gangsverifikation:

Fabrikanten foranlediger indregulering /kalibrering af inklinationssensor, samt geometrisk bestemmelse af produkttankenes volumen i relation til pejlestavenes niveau og herunder efterfølgende fastlæggelse af pejletabel i måleanlæggets flowcomputer

1.gangsverifikation :

1. gangsverifkation er udført i to step: **Første step** er udført af Eichamt Landshut – Passau, Bayern på produktionssteddet af det Tyske, og indeholder alle nødvendige kalibreringer af dispstick systemet, fuld plombering, mærkning (Nameplate) og ajourføring af Datasheet (Messanlagenbrief)

Andet step er udført af et bemyndiget verifikationslaboratorie på opstillingssteddet i Danmark. Eventuel funktion med temperatur kompenseret visning deaktiveres i systemets flowcomputer. Mærkning (Name plate) og Datasheet (Messanlagenbrief) kontrolleres. Systemets elektroniske historik for ændringer og elektronisk plombebrud kontrolleres. Systemet plomberinger erstattes med Dansk verifikationsmærke, og påføres verifikationsmærkat.

Reverifikation:

Reverifikation foretages periodisk i henhold til gældende bestemmelser, samt såfremt den legale plombering er brudt eller defekt, eller efter indgreb, der kan have betydning for udmålingernes nøjagtighed. Reverifikationen udføres i henhold til beskrivelser i denne godkendelse og tilhørende dokumenter.

6. MÆRKNING

<u>Skalaplade:</u> Liter

<u>Nameplate/Verifikationsskilt:</u>

Til væsker i viskocitetsområde ≤ 20 mPa·s ved 20℃

TS nr. (Tankmåleanlæg nr) ……

Mindste udmålte mængde……. liter

Verifikation gælder kun litertælleren

Verifikation gælder kun ikke kompenseret volumen

Verifikationsskilt (Nameplate) sikres med 18 mm årstalsplombe til måleanlæg.

ID/type label Controller: Type og serie nr

<u>ID/type label Pejlestav:</u> Type og serie nr

BEMÆRK

Måleinstrumenter, som ikke er helt identiske med det i attesten fastlagte, kan kun verifcieres under forudsætning af særskilt godkendelse ved tillæg til denne attest.

7. Plombering

I Controllerboksen, indeholdende systemets elektroniske styring, plomberes Memory flash og E-PROM med legal SW plomberes med sikringsmærkater mod fjernelse. Controllerboks plomberes med sikringsmærkat mod åbning over en af lågets sammenspænindingsskruer. Controllerboksens type skilt(e) og type mærkat plomberes med sikringsmærkat mod fjernelse. To skruer over dæksel på MFI boksens SW switch plomberes med sikringsmærkater. To skruer over dæksel over MFI boksens interfacekort plomberes med sikringsmærkater. Inklinatorsensoren plomberes mod fjernelse med sikringsmærkat over sammenspænindingsskruer til tankvognschassis. Inklinatorsensorboksens ID/Typeskilt plomberes mod fjernelse med sikringsmærkat. Niveaustavsensor og pejlestav plomberes mod fjernelse med tråd og plombe gennem fast punkt på bundtank og sammenspændingsskrue på pejlestav, eller én sammenspændingsskrue for pejlstavsfatning og én skrue på niveaustavssenso. Name plate plomberes med sikringsmærkat mod fjernelse. Funktionsdiagram plomberes mod fjernelse (kan evt. indgå i data sheet). Data sheet plomberes med sikringsmærkat.

8. Virkemåde/Konstruktion

Måleanlægget består af et antal produkttanke hvor sammenhæng mellem geometri og volumen er fastlagt. Hver tank inkluderer en tilhørende pejlestang monteret fra bund til top, som detekterer væskeniveauet. Systemets elektroniske styrring indeholder flowcomputer med kalkulation, som sammenholder registrering af væskeniveau, med fastlagt pejletabel og inklinationsregistrering. Flowcomputeren er tilsuttet en betjenings – og visningsenhed. Printer indgår ikke som en del af konstruktionen.

Med hensyn til systemets detaljerede virkemåde og konstruktion, henvises til PTB godkendelse 4.412 / 06.08 og gældende Dezidata Installations guide DCST system.

9. DOKUMENTATION

Ansøgning 591-35-00004

P. Claudi Johansen
Sikkerhedsstyrelsen
Nørregade 63, 6700 Esbjerg
Tlf. 33 73 20 00
E-post: sik@sik.dk
www.sik.dk

BEMÆRK

Måleinstrumenter, som ikke er helt identiske med det i attesten fastlagte, kan kun verifcieres under forudsætning af særskilt godkendelse ved tillæg til denne attest.

TYPEGODKENDELSESATTEST Funktions – og rørdiagram	Nr.: 591-35-00004 Dato: 2012-08-06

Funktionsdiagram

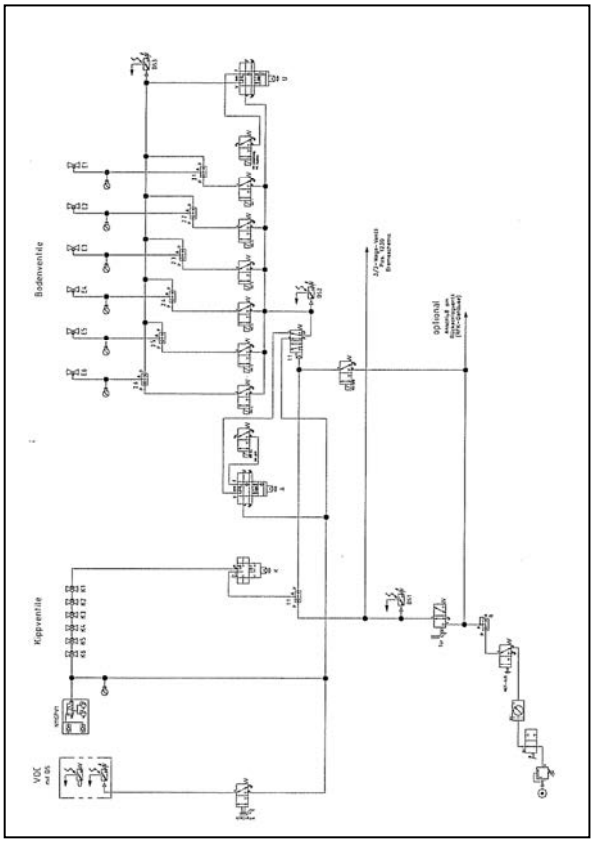

Rørdiagram

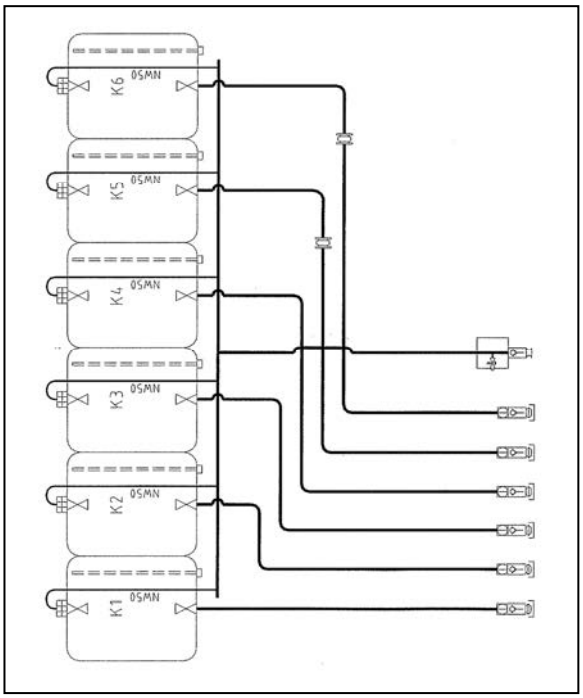

BEMÆRK

Måleinstrumenter, som ikke er helt identiske med det i attesten fastlagte, kan kun verifcieres under forudsætning af særskilt godkendelse ved tillæg til denne attest.

TYPEGODKENDELSESATTEST Plombering	Nr.: 591-35-00004 Dato: 2012-08-06

Controller boks med SW EPROM:

Controllerboksdæksel Mod åbning

Type/S.no. skilt

Type/S.no mærkat

Controllerboks dæksel mod åbning

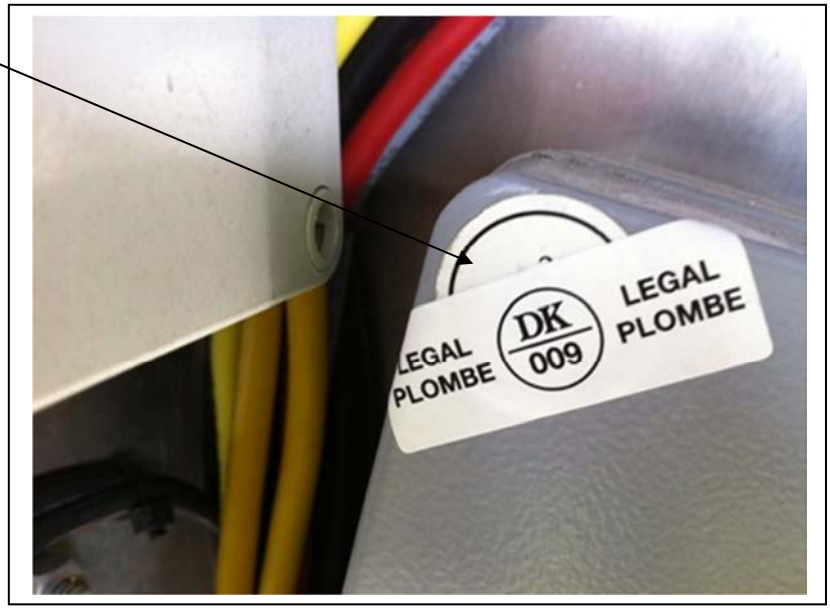

BEMÆRK

Måleinstrumenter, som ikke er helt identiske med det i attesten fastlagte, kan kun verifcieres under forudsætning af særskilt godkendelse ved tillæg til denne attest.

TYPEGODKENDELSESATTEST Plombering	Nr.: 591-35-00004 Dato: 2012-08-06

MFI boks åben (oversigt) Bemærk : Dæksel plomberes ikke mod åbning

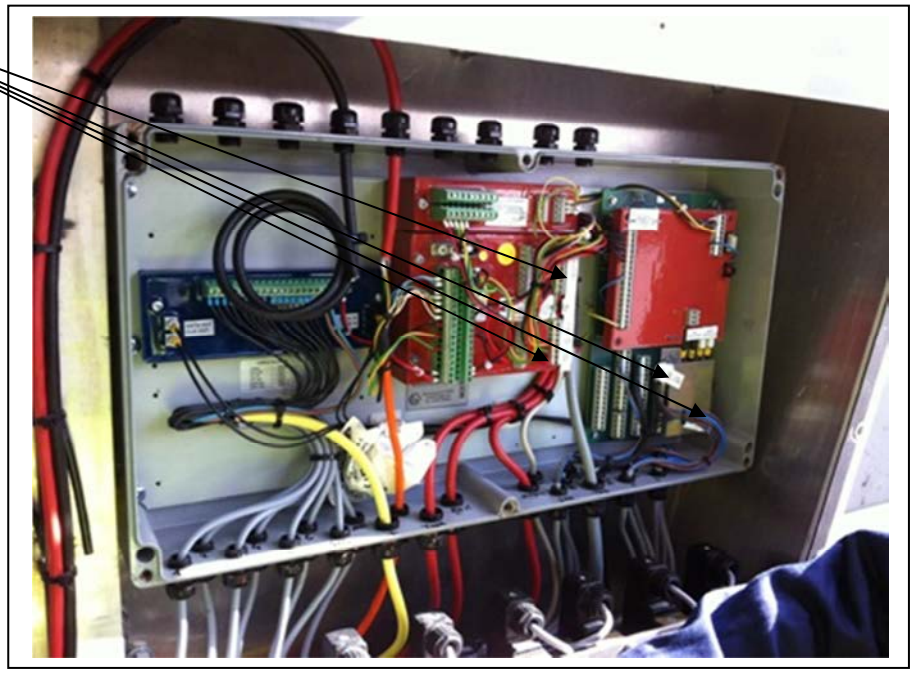

MFI boks SW Switch

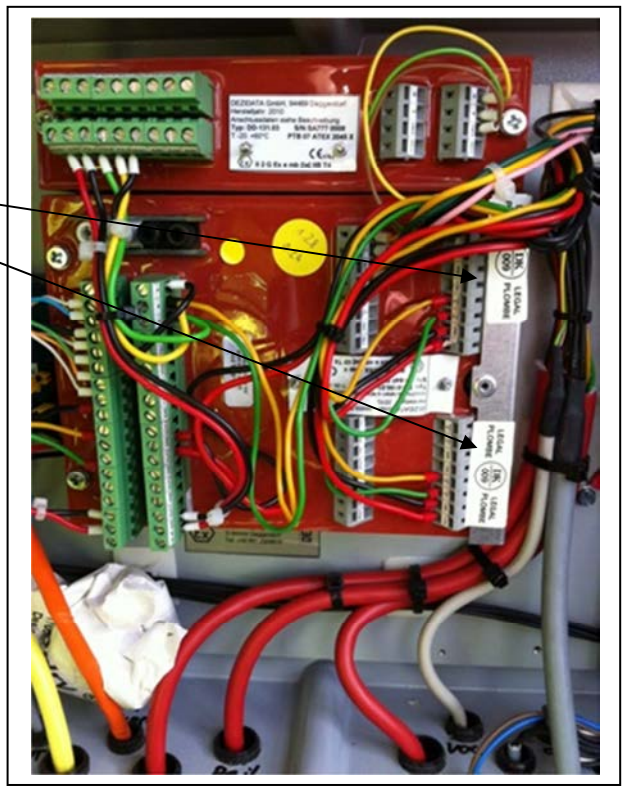

BEMÆRK

Måleinstrumenter, som ikke er helt identiske med det i attesten fastlagte, kan kun verifcieres under forudsætning af særskilt godkendelse ved tillæg til denne attest.

TYPEGODKENDELSESATTEST Plombering	Nr Nr.: 591-35-00004 Dato: 2012-08-06

Controllerboks indvendig sikring med Sikringsmærkat:

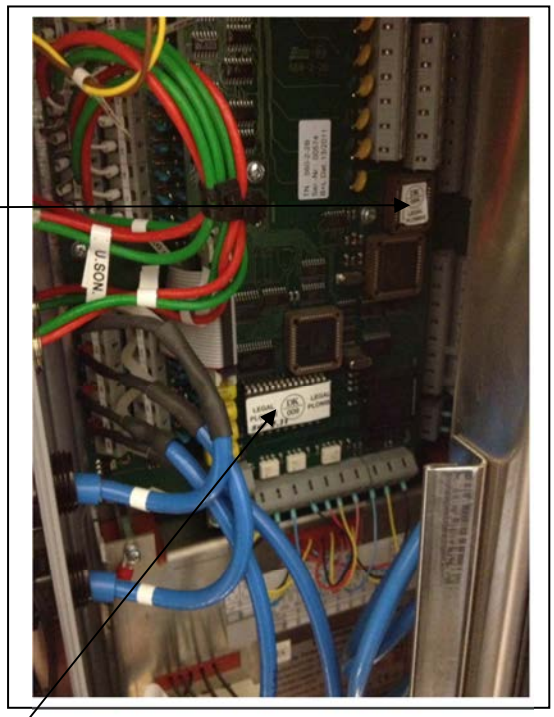

Memory Flash

Type/S.no. skilt (indvendig)

E-PROM med Legal SW:
SW version iht. Parameter print noteres med tuds på sikringsmærkat

BEMÆRK

Måleinstrumenter, som ikke er helt identiske med det i attesten fastlagte, kan kun verifcieres under forudsætning af særskilt godkendelse ved tillæg til denne attest.

TYPEGODKENDELSESATTEST Plombering	Nr.: Nr.: 591-35-00004 Dato: 2012-08-06

MFI boks Interfacekort mod åbning

Alternativ placering af MFI og Controller boks, åben (oversigt)

MFI boks

Controller boks med SW EPROM

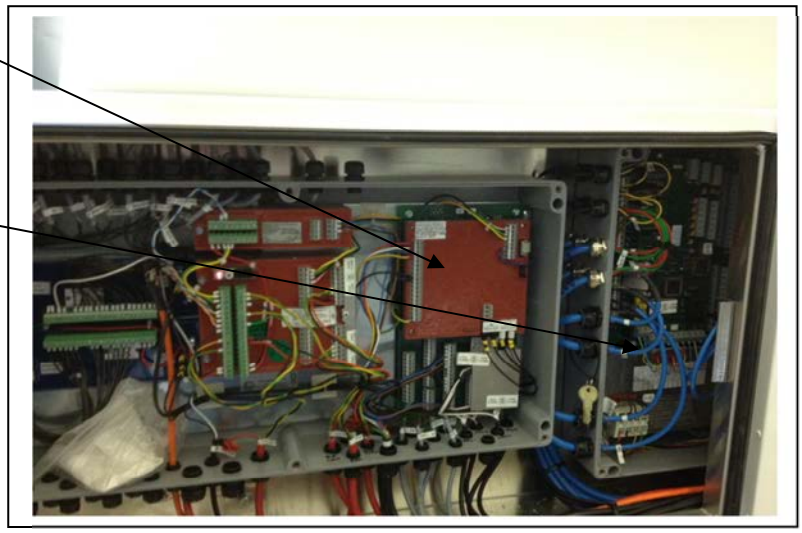

BEMÆRK

Måleinstrumenter, som ikke er helt identiske med det i attesten fastlagte, kan kun verifcieres under forudsætning af særskilt godkendelse ved tillæg til denne attest.

TYPEGODKENDELSESATTEST Plombering	Nr.: 591-35-00004 Dato: 2012-08-06

Inklinatorsensor

Typeskilt

Inklinatorsensor mod åbning

BEMÆRK

Måleinstrumenter, som ikke er helt identiske med det i attesten fastlagte, kan kun verifcieres under forudsætning af særskilt godkendelse ved tillæg til denne attest.

TYPEGODKENDELSESATTEST Plombering	Nr.: 591-35-00004 Dato: 2012-08-06

Niveaustavsensor og pejlestav bund med plombe og tråd

Type/S.no,. mærkat med sikringsmærkat

Alternativ plombering: Niveaustavssnesor og pejlestav bund med plombe og tråd

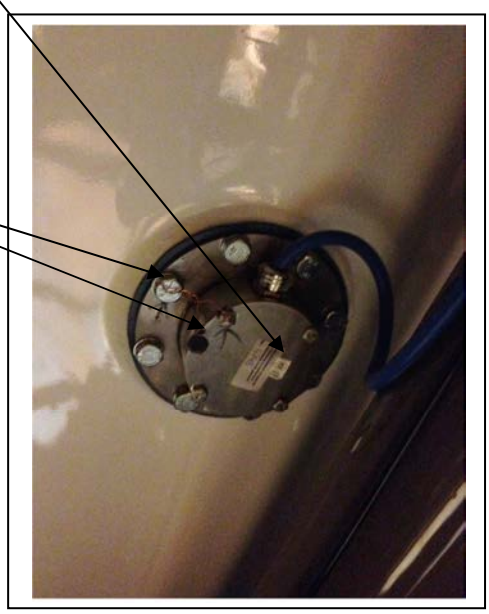

BEMÆRK

Måleinstrumenter, som ikke er helt identiske med det i attesten fastlagte, kan kun verifcieres under forudsætning af særskilt godkendelse ved tillæg til denne attest.

TYPEGODKENDELSESATTEST Plombering	Nr.: 591-35-00004 Dato: 2012-08-06

Name plate:

Tysk eksempel:

Sikring af nameplate mod fjernelse

Dansk eksempel:

Årstalsmærkat

BEMÆRK

Måleinstrumenter, som ikke er helt identiske med det i attesten fastlagte, kan kun verifcieres under forudsætning af særskilt godkendelse ved tillæg til denne attest.

TYPEGODKENDELSESATTEST Plombering	Nr.: 591-35-00004 Dato: 2012-08-06

Funktionsdiagram:
(Kan evt. indgå i Data-sheet)

Årstalsmærke, Display

BEMÆRK

Måleinstrumenter, som ikke er helt identiske med det i attesten fastlagte, kan kun verifcieres under forudsætning af særskilt godkendelse ved tillæg til denne attest.

Short Guide

Working on DIPCHECK2 for Metrological Purpose

DEZI DATA GmbH

This document as well as all ideas therein are the intellectual property of the company DEZIDATA GmbH and must not be disclosed to third parties without our express written consent!

Author(s):
- Manolo Müller-Menendez
- Nico Decker

Dated / Revision History: 2011-08-17, Version 1
- First version of document

Version: 1

1 Preface

This is a short user guide only. Therefore, some descriptions are not very detailed. In order to obtain more detailed information, please address to the service hotline of DEZIDATA (+49-991-29090-200).

Although it might not be mentioned explicitly, it should be clearly stated that you should contact your local metrological authority **before** breaking any seals and/or replacing modules/units/sensors of metrological relevance.

Although the document is structured so that it is possible to jump into the section one is interested in, it is highly recommended to read the whole document at least once. Before starting an action, it is highly recommended to thoroughly read the whole section in question.

2 Requirements

2.1 Hardware equipment

- Notebook or local PC
- DEZIDATA's "DCSTF Diagnostic Cable"

2.2 Software

- Program CHIPTOOL of BECK-IPC (to be downloaded from http://www.beck-ipc.com/en/download/index.asp)

2.3 Configuration of PC

Communication is based on TCP/IP-protocol. In order to get into contact with the TVE, local network configuration on the PC might have to be adjusted.

Recommended network configuration on PC:

- DHCP: off ("do **not** obtain IP address automatically")
- IP address: 192.168.200.100
- Netmask: 255.255.255.0

3 Connecting to the Vehicle

3.1 First Steps

- Plug in diagnostic cable to PC on one side and to diagnostic socket at vehicle on the other side.
- Start program CHIPTOOL.
- After a few seconds, in the main window area of CHIPTOOL a text line should appear, a table row containing serial number, a name like "DD100", DHCP=No, IP=192.168.200.59 and some further data.
- Right-click on this table row, and select "FTP" in context menu.
- In the appearing Connect Dialogue adjust user name and password, if necessary (settings will be stored, once entered):
  - User name: ftp1
  - Password: ptf1
- Click on "Connect".

3.2 FTP-Connection

3.2.1 Appearance of CHIPTOOL FTP Window

- Left side: local drives and directories/files on selected local drive (your PC/laptop).
- Right side: remote drives and directories/files on selected remote drive (TVE/vehicle).

3.2.2 Description of Files and Directories on TVE/Vehicle

On right/remote side, select drive letter "B". The right side of the window will refresh automatically.

Only a subset of files and directories are important.

Important files:

- metrological program ("DCSTFMET.EXE")
- metrological configuration file ("DCSTFMET.INI")
- user interface program ("DCSTFUSR.EXE")
- user interface configuration file ("DCSTFUSR.INI")
- delivery notes file ("DELIVNOT.RBF")
- diptable ("DIPTAB.TRK")
- inclination correction file ("INCLCORR.ICF")
- metrological product list ("METRPROD.SDC")
- user product list ("PRODLIST.SDC")

Important directories/folders:

- console log files ("CONSOLE.LOG")
- FTL coded log files ("FTL.LOG")
- log files with measured levels and inclination ("LEVELS.LOG")
- files containing printed data ("PRINTS.TXT")

Files in these folders are enumerated. File names with the highest number are the most recent ones. When for example searching for data just printed out, move into folder "PRINTS.TXT" and choose the file(s) containing the highest number(s). Usually, these are the files standing at the very bottom.

3.2.3 Copying Files

In order to copy files to local PC:

- Select destination drive and directory on left/local side.
- Optionally move into desired source folder on right/remote side.
- Select files to be copied on right/remote side.
- Press F6 or use right-click context menu. The files will be copied from right to left side.

Notes:

- Transferring files from left/local side to right/remote side works the same way. Simply select destination on the right and source on the left side.
- In order to copy multiple files for e.g. creating or restoring a backup, more than one file and folder can be marked before pressing F6.
- If you plan to overwrite files on the right/remote side:
  - Only do so, if you know what you are doing! You might end up with an unusable system!
  - Create a backup before overwriting files on the right/remote side. Overwriting files might lead to severe problems with the file structure and/or configuration. The system might be unusable afterwards!
  - If in doubt, seek for advice at +49-991-29090-200.

3.2.4 Viewing/Modifying Files

Viewing is possible on either left/local or right/remote side:

- Select desired file to be viewed/modified.
- Press F4 or use right-click context menu.
- Editor NOTEPAD will appear.
- After closing the editor, CHIPTOOL asks, whether file should be transferred to the TVE, if a file from the right has been selected.

Notes:

- It is highly recommended to not modify files on the TVE. Only do so, if you know what you are doing. The vehicle might get unusable!
- When files are modified, please take a copy of the file before modification and a copy of the file after modification. Send these files to DEZIDATA (service@dezidata.de), including the id and type (rigid/trailer/semi-trailer) of the vehicle. Please also add a short note, why this modification had to be done. This will help us keeping track on what happened on each vehicle. Furthermore we can cross-check, whether your desired task was accomplished properly.
- If in doubt, seek for advice at +49-991-29090-200.

4 Guidelines

4.1 General

When replacing modules, always switch main switch off while wiring.

4.2 How to Obtain Printout of Metrological Parameters

The printout of metrological parameters contains all data, which is of metrological relevance.

Steps:

- Go to DEZITOUCH.
- Get back into start screen (overview over all compartments).
- Press key "Print".
- Select "Metrological data" or "Diptable", depending on what data you desire.
- In case of "Diptable", select number of compartment in the appearing dialogue.
- Wait until printing is finished (pop-up window disappears).
- Connect with FTP (see section 3).
- Copy or view the latest file(s) in remote folder "PRINTS.TXT".

4.3 How to Reseal the System

When metrological data has been modified or the system's seal (DD0100) has been physically broken (magnet removed and remounted), the system needs to be resealed electronically. Otherwise it will be impossible to start any transaction, while the sealing magnet is mounted.

Steps:

- Dismount seal magnet (aluminium plate on one side of DD0100 inside of MFI box, which is fixed with two screws, possibly protected by metrological stickers).
- Go to DEZITOUCH.
- Get back into start screen (overview over all compartments).
- If seal magnet has just been dismounted, an appropriate pop-up message will appear. Press "OK" then.
- Press key "More..".
- Press key "Reseal".
- Wait for pop-up message telling that magnet can be remounted. Press "OK" then.
- Remount magnet and fix the two screws.
- On DEZITOUCH a pop-up message should appear within 10 seconds after remounting the magnet. The message should inform about success of resealing procedure. Press "OK".

Notes and recommendations:

- Only break the seal of a sealed system after contacting the local metrological authority.
- Print out metrological parameters before modifying any parameters and before breaking the seal (see section 4.2).
- Print out metrological parameters after system has been sealed (see section 4.2).
- Possibly check printout for correctness.
- Try to switch the system off and on, and try to start a transaction (either loading or unloading). When resealing succeeded, there should not be any error message.
- Usually, the metal plate has to be protected by metrological stickers. Seek your local metrological authority for advice.

4.4 Replacing the Inclination Sensor

- Dismount the old sensor.

- Mount the new sensor.
- Verify that sensor has been fixed tightly.
- Use a digital water level to bring vehicle into inclination 0° in longitudinal and transversal direction.
- Go to DEZITOUCH.
- Get back into start screen (overview over all compartments).
- Note down current inclination in left bottom corner of display, in longitudinal (first value) and transversal (second value) direction. The line might look similar to:

```
Incl.: 0,2° / -0,3°
```

- Connect with FTP (see section 3).
- Edit remote file "DIPTAB.TRK".
- Roll down about 40 lines to the first line starting with "T,". It might look similar to

```
T,id123,Trailer,container1234,Manufacturer,approval 4.512/10.29,construction
807380a,0.123,0.456
```

- The two fields (comma separated) after the construction number (field number #9 and #10) contain the reference inclination in longitudinal (#9) and transversal (#10) direction. In the example above: 0.123° and 0.456°.
- Take the noted inclination from the display (0.2 and -0.3) and add the values to the corresponding values in field #9 and #10 (0.123 and 0.456). Using the example values above, the resulting line should like

```
T,id123,Trailer,container1234,Manufacturer,approval 4.512/10.29,construction
807380a,0.323,0.156
```

- Save the file and exit the editor.
- Acknowledge question, whether file should be stored back onto remote side.
- Switch system off and on.
- Wait until start screen appears (overview over all compartments).
- Verify that inclination in left bottom corner indicates 0° in both directions.

Notes and recommendations:

- Make sure that a decimal point "." is used, when writing numeric values to the file. Never use a comma "," for numeric values.
- Follow instructions to reseal the system (see section 4.3) and to print out the metrological parameters before and after the modification (see section 4.4).

4.5 Replacing the Dip-Controller

The dip-controller unit does not have to be configured separately. Before shipment, it has been tested and approved by the German metrological authority ("Eichamt").

Usually there are no special restrictions for replacing the dip-controller. In any case it is highly recommended to ask the local metrological authority for advice on how to proceed.

However, it is good practice to load the vehicle before replacing the dip-controller. After the replacement it is then possible to cross-check loaded quantities against to what is shown on the display. Furthermore, this procedure helps detecting a cross-over of compartment wires, when e.g. wires from sensor of compartment 1 are connected to sensor input of compartment 2.

In any case, **double**-check the correct wiring of dipstick and temperature sensors.

Note: The dip-controller itself is to be sealed mechanically (using e.g. metrological stickers). Therefore, it is not necessary to break the electronic seal at the DD0100 and to reseal the system. Metrological parameters will not change except for the displayed serial number of the dip-controller.

4.6 Replacing a Dip-Sensor

A dip-sensor unit does not have to be configured separately. Before shipment, it has been tested and approved by the German metrological authority ("Eichamt").

Usually there are no special restrictions for replacing a dip-sensor. In any case it is highly recommended to ask the local metrological authority for advice on how to proceed.

After the sensor has been replaced it is necessary to fill the compartment in question with at least the MMQ in order to verify that the sensor fulfils all functions.

Notes:

- As a matter of course, the compartment in question should be empty before replacing its sensor. Since the sensor is usually replaced for a reason (defective), it is good practice to physically look into the compartment for verification and not to rely on the dip-stick readings on the display.
- The dip-sensor itself is to be sealed mechanically (using e.g. metrological stickers). Therefore, it is not necessary to break the electronic seal at the DD0100 and to reseal the system. Metrological parameters will not change.

4.7 Replacing a Temperature Sensor

A temperature sensor does not have to be configured separately. Before shipment, it has been tested and approved by the German metrological authority ("Eichamt").

Usually there are no special restrictions for replacing a temperature sensor. In any case it is highly recommended to ask the local metrological authority for advice on how to proceed.

After replacement, start unloading mode and go into the detailed view for the compartment in question. When the sensor has been connected correctly, the temperature in the detailed view should correspond to current ambient temperature.

Note: The temperature sensor itself is to be sealed mechanically (using e.g. metrological stickers). Since the sensor is connected to the dip-controller, the physical seal at the controller has to be broken as well. However, it is not necessary to break the electronic seal at the DD0100 and to reseal the system. Metrological parameters will not change.

4.8 Replacing a Wet-leg-Sensor

A wet-leg-sensor does not have to be configured separately. Before shipment, it has been tested and approved by the German metrological authority ("Eichamt").

Usually there are no special restrictions for replacing a wet-leg-sensor. In any case it is highly recommended to ask the local metrological authority for advice on how to proceed.

Depending on local regulations the wet-leg ports inside the MFI box might be protected with a metal plate and metrological stickers. They have to be broken then in order to replace the sensor.

In order to verify, whether the new sensor has been connected correctly, the pipe work of the corresponding compartment should be shown empty (white) on the display directly after the replacement. After filling up the pipe work with liquid, the status should change to "filled up" (black).

Notes:

- Please verify that the pipe work in question is empty before dismounting the wet-leg-sensor.
- The wet-leg-sensor itself is to be sealed mechanically (using e.g. metrological stickers). Therefore, it is not necessary to break the electronic seal at the DD0100 and to reseal the system. Metrological parameters will not change.

4.9 Replacing the Main CPU (DD0100)

The DD0100 is the main processor unit of the whole system DIPCHECK2, which includes the main software and almost all configuration and parameters (including metrological parameters).

It is absolutely necessary to have a backup of the unit to be replaced before starting the replacement. If the unit to be replaced is unreachable, please address to the service hotline (+49-991-29090-200) for further advice.

As a matter of course, the DD0100 is of essential metrological relevance. Therefore, it is highly recommended to ask the local metrological authority for advice on how to proceed **before** breaking any seal.

Steps:

- Create a metrological printout of the system (see section 4.2).
- Create a backup of drive B: of DD0100 to be replaced (see section 3.2).
- Switch main switch off.
- Replace DD0100, but do not mount the metal plate with the seal magnet yet.
- Switch main switch on.
- Restore backup created before to drive B: of replaced DD0100 (see section 3.2).
- Switch main switch off and on.
- Reseal the system (see section 4.3).
- Create a metrological printout of the system (see section 4.2).
- Compare previous and later metrological printout with each other. It should be equal except for:
  - date and time of sealing
  - seal counter
  - possibly signature of coprocessor (if other approved firmware installed on coprocessor)
  - metrological signature (due to other serial number of DD0100)
  - serial number of coprocessor
  - serial number of "metrological program" (serial number of main chip in DD0100)
- Submit backup, printouts and a short note to service@dezidata.de

4.10 How to Enable/Disable Temperature Compensation

The method of temperature compensation is configured/enabled inside of the metrological product list (file "METRPROD.SDC" on drive B: of DD0100). Use FTP to modify the file remotely (see section 3).

Create a metrological printout before any modification (see section 4.2).

The file will look similar to

```
P,1,HEL,2,846,810,890,8000,15
P,2,DK,2,837,800,870,8500,15
P,3,BF,2,737,700,780,12300,15
P,4,SUV,2,750,700,800,12000,15
P,5,SU,2,750,700,800,12000,15
P,6,SUP,2,752,700,800,12000,15
P,7,KER,2,801,700,900,9300,15
P,8,JET,2,801,750,850,9300,15
P,9,BIO,5,831,800,860,8600,15
P,10,E50,1,759,710,800,10,15
P,11,E85,1,785,740,820,10,15
```

Each line corresponds to a product. The third field (separated by comma), right after the product name, contains the method of temperature compensation. In case of the first product "HEL", the method would be "2".

The following method codes can be used:

- 1: uncompensated / temperature compensation inactive
- 2: temperature compensation according to DIN 51757, Group B
- 5: linear temperature compensation using a temperature coefficient

This list might not be complete. If in doubt, check out the product listing of the metrological printout. At the end of the listing, a list of compensation methods is printed.

Notes:

- After the modification, the system has to be restarted (main switch off and on again). After this restart the system has to be resealed (see section 4.3).
- Create a metrological printout after resealing (see section 4.2). Verify the success of your modification on the printout.
- Although temperature compensation has been deactivated, the label "V15" will still appear on the display in detailed view. However, its value will stay 0 all the time. This minor "ugliness" might disappear in the near future.
- Although temperature compensation has been (de)activated, the label "V15" with its value might be (not) present on a ticket printout. The layout of the ticket might have to be adjusted to show/hide "V15" with its value. However, the value will be printed as "####", if temperature compensation has been deactivated.

TEKNISK BILAG	Nr.: 591-35-00004
	Bilag nr.: 2
Tankvogn med niveaumåling Reseal the system	**Dato:** 2012-08-06
	Side: 1 af 1
Ansøgning nr: 591-35-00004	Systembetegnelse: TS 22.48-001

How to Reseal the System

Dismount magnetic Seal from DD100

↓

Press OK on the Dezitouch when the Message Popup for the broken Seal appears

↓

Press key „More“ and then „Reseal“ on the Dezitouch

↓

Press OK on the Dezitouch when the Message Popup for the Resealing appears

↓

Mount magnetic Seal on DD100

↓

Press OK on the Dezitouch when the Message Popup for the Seal back in place appears

TEKNISK BILAG	Nr.: 591-35-00004
	Bilag nr.: 3
Tankvogn med niveaumåling Printout Metrological parameters	**Dato:** 2012-08-06
	Side: 1 af 1
Ansøgning nr: 591-35-00004	Systembetegnelse: TS 22.48-001

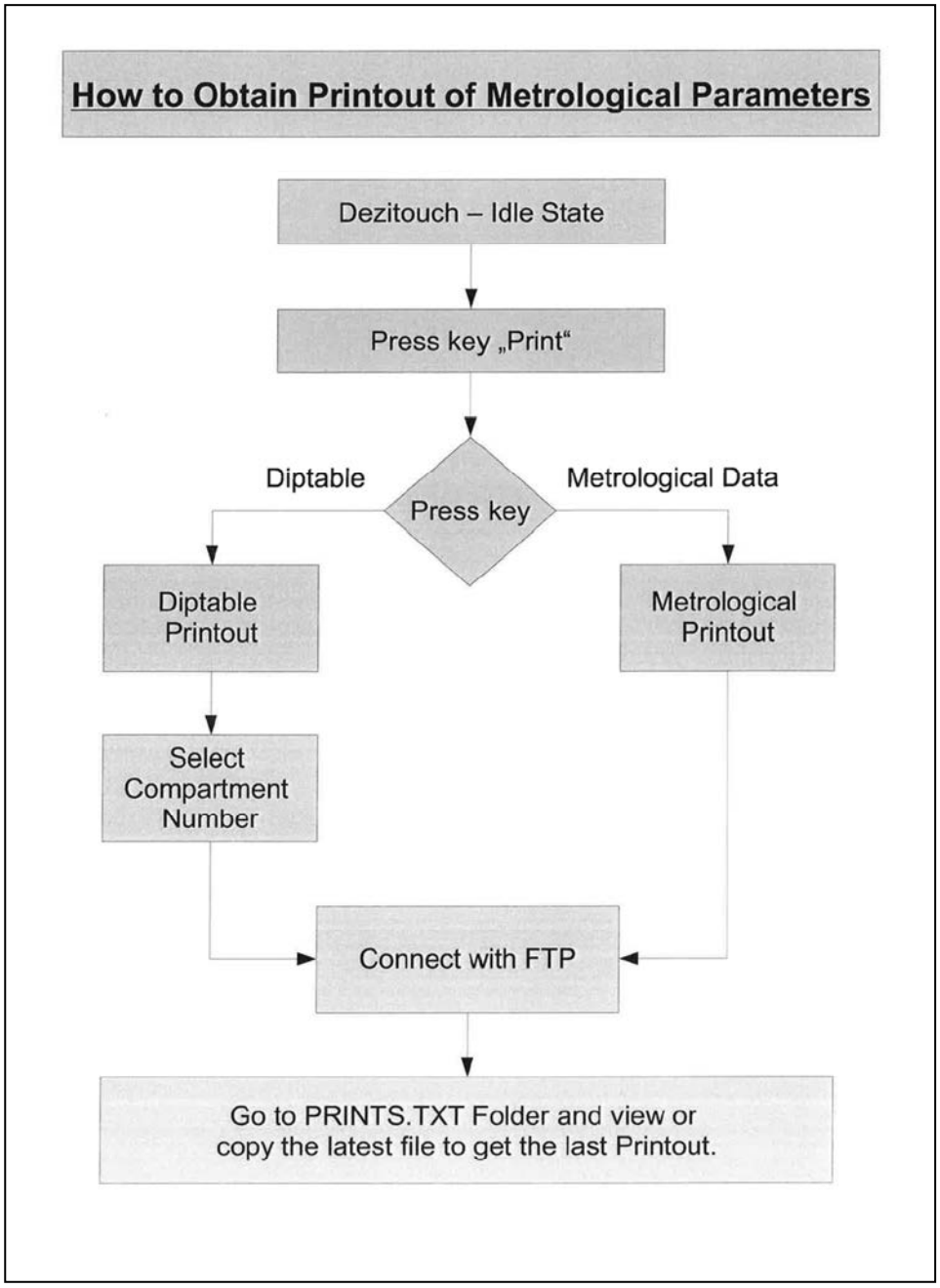

How to Replace the Main CPU

Create a metrological Printout and take a full Backup of the DD100 Drive B:

↓

Replace the DD100

↓

Restore the taken Backup of Drive B: and Reboot the System.

↓

Reseal the System and create a metrological Printout.

↓

Compare the new and the old metrological Printout.
It should be equal exept for:
- date and time of sealing
- seal counter
- possibly signature of coprocessor
- metrological signature
- Serial number of coprocessor
- Serial number of metrological program

TEKNISK BILAG	Nr.: 591-35-00004
	Bilag nr.: 5
Tankvogn med niveaumåling Replace Dip-Controller	**Dato:** 2012-08-06
	Side: 1 af 1
Ansøgning nr: 591-35-00004	Systembetegnelse: TS 22.48-001

How to Replace the Dip-Controller

Replace the Dip-Controller

↓

Compare Volumes and Density shown on the Dezitouch to Loading Papers.

↓

Follow the Reseal Instructions.

How to Replace the Dip-Sensor

Replace the Dip-Sensor

↓

Compare Volumes and Density shown on the Dezitouch to Loading Papers.

TEKNISK BILAG	Nr.: 591-35-00004
	Bilag nr.: 6
Tankvogn med niveaumåling Replace Inclination Sensor	**Dato:** 2012-08-06
	Side: 1 af 1
Ansøgning nr: 591-35-00004	Systembetegnelse: TS 22.48-001

How to Replace the Inclination Sensor

Replace Inclination Sensor

↓

Put the Vehicle into inclination 0% 0°
with electronic water level tools

↓

Note current inclination on the Dezitouch
e.g. 0.2°/ -0.3°

↓

Connect with FTP and edit the Diptab.trk file

↓

Find the „T“ sentence and locate the two inclinations offsets.
Thees are the comma separated field numbers 9 and 10.

↓

Add the current inclination values to the inclination offsets
e.g. (0.12°/ 0.34%) + (0.2°/ -0.3%) = (0.32°/ 0. 04%)

↓

Save the file, exit the editor and press „Yes“
for uploading the file when the Popup appears

↓

Restart the System and check the inclination on
the Dezitouch, it should be 0% 0° now.

↓

Follow the Instuctions for Resealing the System

How to Replace the Dip-Controller

Replace the Temperature Sensor

↓

Fill Wetleg with product.

↓

Compare Temperature shown on the Dezitouch to a Thermometer

How to Replace the Wetleg Sensor

Replace the Wetleg Sensor

↓

Empty the Wetleg and check if the Wetleg Sensor Sign on the Dezitouch shows „dry“

↓

Fill Wetleg with product.

↓

Check if the Wetleg Sensor Sign on the Dezitouch switches to „wet“